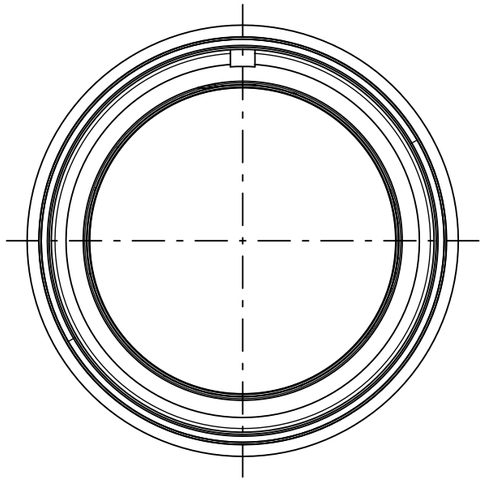

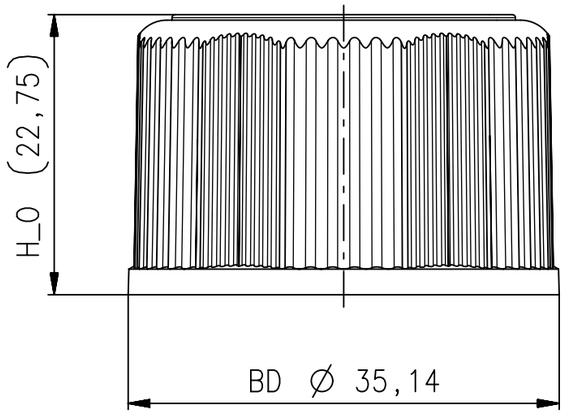

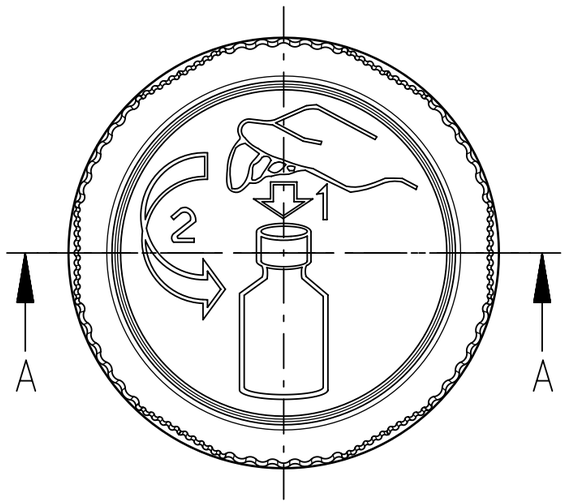

SECTION A-A
SCALE 4:1

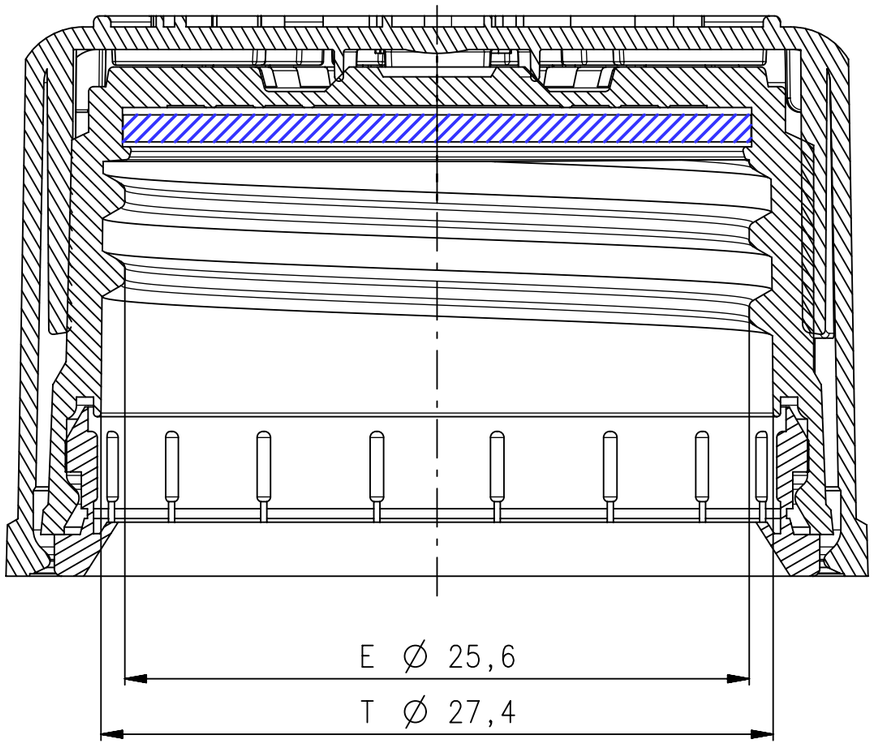

Alpla 28mm CRC
tamper proof closure

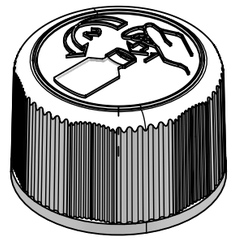

Alpla 28mm CRC
tamper proof inner cap

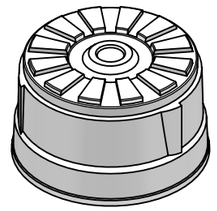

Alpla 28mm CRC
TE ring

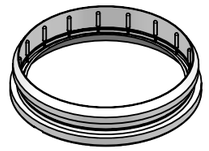

SYSTEM INFORMATION

over cap: 9301_017_023_01
inner cap: 9301_017_025_01
TE-ring: 9301_017_024_01

Info: system with liner

THREAD DETAIL:

PITCH: 3,2mm
TURNS: unscrew
1 START THREAD

Index	Modification:	Name	Date	Index	Modification:	Name	Date
-	-	-	-	-	-	-	-

Scale:		Name	Date
2:1	Prepared:	Suess Georg	08.Jul.21
1:1/4:1	Reviewed:		

ALPLA reserves all rights to the technical IP contained in the document

Superseded:
Superseded by:
Weight: 0.00kg

Art.No.:
Page: 1 of 1
Revision: 00

Title:
Alpla 28mm CRC tamper proof assembly
ASC CRC cap 28mm

Drawing No.:
9301_017_026_01_C1